CARIOLI
ENGENHARIA

CR-NX SERIES

CARTESIAN ROBOTS

Industrial robotics for product handling, transfer and palletizing.



carioliengenharia.com.br

SOLUTIONS

Automation for different industrial challenges.

Carioli solutions start with each application's needs. Whether moving products, automating machine tasks or integrating equipment into the production flow, engineering guides system selection and configuration.

HOW WE DEVELOP YOUR SOLUTION

01 Application assessment > **02** Solution definition > **03** Engineering & manufacturing > **04** Installation and integration > **05** Training and support

WHERE AUTOMATION FITS

Molded part removal

Remove molded parts in sync with the injection molding cycle.

Pick & place

Handle and position products with precision and repeatability.

Transfer between stations

Move products between production stages in a synchronized flow.

Case packing

Pack products in boxes according to predefined packing arrangements.

Palletizing

Arrange boxes and loads on pallets according to defined patterns.

Depalletizing

Remove products from pallets to feed production processes.

OUR JOURNEY

2024 First milestones

- 1st award CW24
- Participation at FIIL
- Robot used in the health sector
- Workspace expansion from 9 m² to 80 m²

2025 Engineering in the field

- Incubation at ConstruHub
- Progress in palletizing robots

CASE STUDIES

Engineering that delivers results

MORE OUTPUT. LESS EFFORT FOR THE TEAM.

Carioli Engenharia developed two robotic palletizing cells integrated with four production conveyors. Each cell serves two conveyors and builds two pallets, supporting different stacking patterns to meet the needs of the operation.

BEFORE AUTOMATION

5 PEOPLE | Line speed of 240 m/min.

WITH ROBOTICS

3 PEOPLE | Line speed reaching 300 m/min.

2 ROBOTIC CELLS
Independent palletizing systems.

OVER 20 PATTERNS
Different palletizing arrangements.

4 INTEGRATED CONVEYORS
Two conveyors served by each cell.

UP TO 25 kg
Handling capacity per box.



BRAZILIAN ENGINEERING FOR THE U.S. MARKET.

A self-service vending machine designed and built by Carioli Engenharia to sell pet products in the United States, with integrated storage, selection, handling and automated product dispensing.

THE CHALLENGE

Bring product displays, interaction and pickup into one buying experience for the pet market.

CARIOLI'S CONTRIBUTION

Detailed design, fabrication and integration of the machine systems to suit the application's setup and operating routine.

PROJECT FOR EXPORT TO THE UNITED STATES



CONFIGURABLE CARTESIAN ROBOTS FOR YOUR OPERATION

CR-NX RANGE

The CR-NX range includes Cartesian robots designed to automate product handling, transfer and palletizing. Different architectures, travel ranges, load capacities and grippers allow each machine to be configured for the process requirements and integration with the production line.

APPLICATIONS AND INDUSTRIES

Where CR-NX works

Automotive, electrical and metalworking

Machine tending, component transfer, and integration of manufacturing and assembly stages.

Plastics and injection molding

Part removal and output organization, in sync with the injection molding machine cycle.

Printing and packaging

Handling packages and boxes from machine discharge through to pallet building.

Food and beverages

Handling packaged products with attention to product integrity, cleanliness and line throughput.

Cosmetics and hygiene

Handling and positioning bottles, packages and boxes in automated operations.

Chemicals and consumer goods

Moving packages and loads, considering load, grip and ambient conditions.



CR-NX-1C

Single-column

COMPACT AUTOMATION AND SIMPLIFIED INTEGRATION

For part removal, product transfer and pick & place operations in cells where installation space is limited.

CR-NX-1P

Single gantry

VERSATILITY AND GREATER REACH

For moving products between stations, feeding equipment and operations that require greater reach.

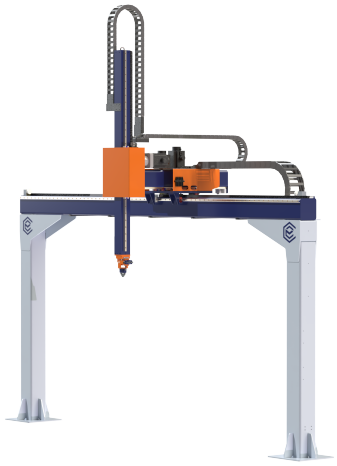



CR-NX-2P

Dual gantry

HEAVY LOADS AND SEVERE DUTY

Structure designed for heavy loads and more demanding operating conditions.

CR-NX TECHNICAL COMPARISON

Parameter	CR-NX-1C	CR-NX-1P	CR-NX-2P
Product payload, up to	15 kg	40 kg	1,000 kg
Tool + accessories / total interface load	5 / 20 kg	10 / 50 kg	150 / 1,150 kg
X usable travel (mm)	500 to 1,500	800 to 3,000	1,500 to 20,000
Y usable travel (mm)	300 to 800	400 to 1,200	800 to 3,000
Reference Z usable travel (mm)	300–1,200 · telescopic	400–1,500 · direct	500–2,000 · direct
X / Y / Z servos · maximum load scenario	750 / 400 / 400 W	750 / 750 / 1,000 W	2,000 / 2,000 / 2,000 W
X / Y / Z speeds, up to (m/s)	1.00 / 1.00 / 0.40	0.80 / 1.00 / 0.50	0.60 / 0.50 / 0.08

SINGLE COLUMN · TELESCOPIC Z · EXTENDED Z OPTION

CR-NX-1C

Single-column Cartesian robot with a telescopic vertical (Z) axis that retracts and extends to save space. The technical sheet details usable travel, overall axis lengths and alternative transmissions.



15 kg
payload, up to

1.5 m
X usable travel, up to

Telescopic
reference Z axis

EXTENDED TELESCOPIC Z · OPTIONAL
Up to 4,000 mm overall length; projected usable travel of 3,300 to 3,350 mm.
Reference loads and speeds must be revalidated for this version.

TECHNICAL VIEWS FOR AXIS IDENTIFICATION

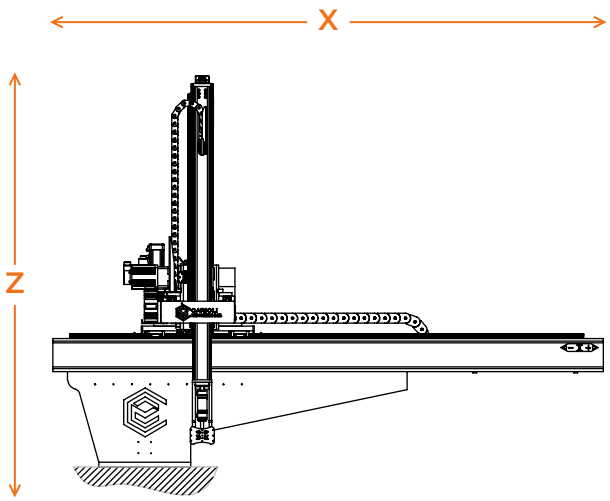

FRONT · X / Z

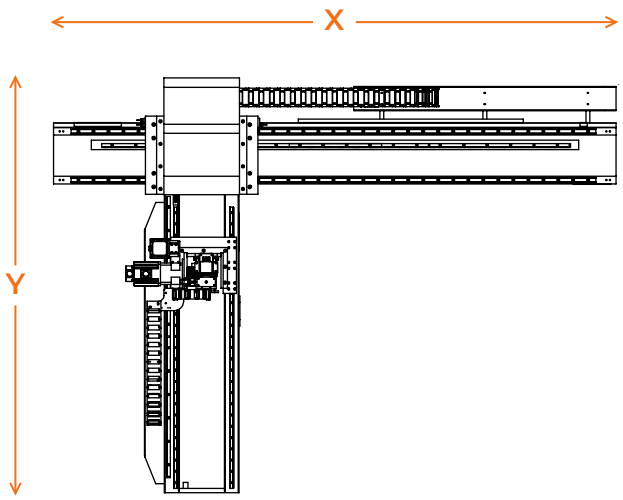

TOP · X / Y

Views not to scale. Overall lengths refer to the axes, not the installation envelope.

REFERENCE RANGES AND CONFIGURATION

PARAMETER	MINIMUM	MAXIMUM
Product payload (kg)	-	15
Tool and accessories (kg)	-	5
Total interface load (kg)	-	20
X usable travel (mm)	500	1,500
X overall axis length (mm)	1,100	2,100
Y usable travel (mm)	300	800
Y overall axis length (mm)	1,000	1,500
Reference Z usable travel (mm)	300	1,200
Z overall axis length (mm)	550	1,450

HELICAL RACK | MAXIMUM LOAD SCENARIO

AXES	X	Y	Z
Servos (W)	750	400	400
Speed, up to (m/s)	1.00	1.00	0.40

ALTERNATIVES:
Ball screw X 500–1,000 mm / 0.31 m/s; Y 300–800 / 0.44; direct Z 300–800 / 0.22.
Timing belt X 500–1,500 and Y 300–800 mm, up to 1.00 m/s. Reference Z: telescopic; rack + belt.

SINGLE GANTRY · CANTILEVERED Y · TELESCOPIC Z OPTION

CR-NX-1P

Single-gantry Cartesian robot with a cantilevered Y axis (supported at one end) and an optional extended telescopic Z axis. The technical sheet details usable travel, overall axis lengths and alternative transmissions.

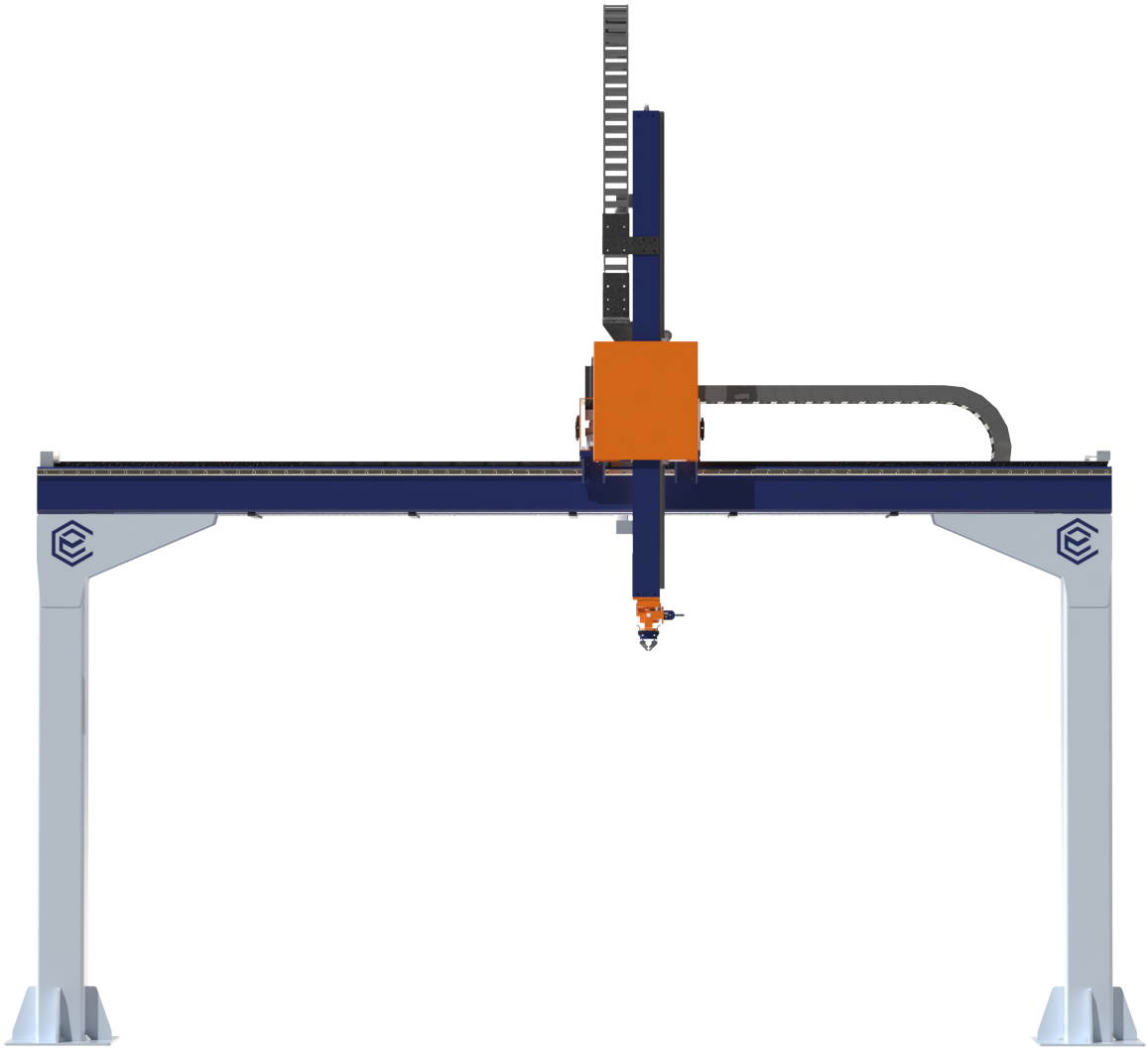

40 kg
payload, up to

3 m
X usable travel, up to

Configurable
gripper

EXTENDED TELESCOPIC Z · OPTIONAL
Up to 4,000 mm overall length; projected usable travel of 3,300 to 3,350 mm.
Reference loads and speeds must be revalidated for this version.

TECHNICAL VIEWS FOR AXIS IDENTIFICATION

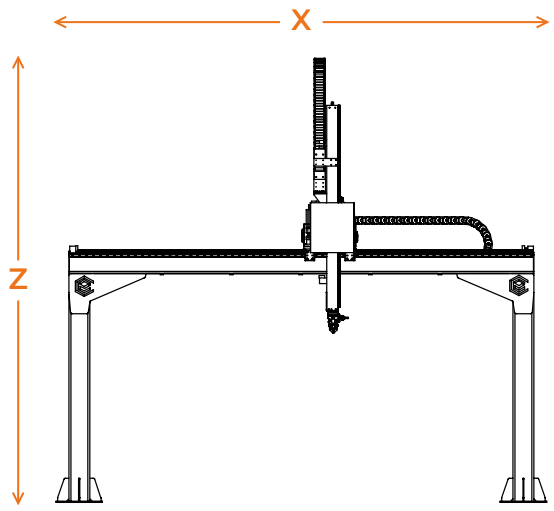

FRONT · X / Z

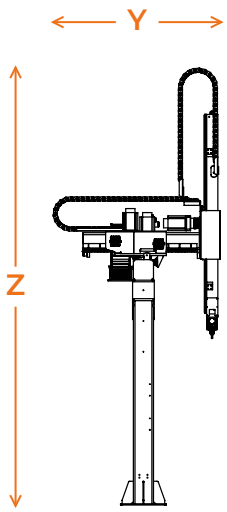

SIDE · Y / Z

Views not to scale. Overall lengths refer to the axes, not the installation envelope.

REFERENCE RANGES AND CONFIGURATION

PARAMETER	MINIMUM	MAXIMUM
Product payload (kg)	-	40
Tool and accessories (kg)	-	10
Total interface load (kg)	-	50
X usable travel (mm)	800	3,000
X overall axis length (mm)	1,300	3,500
Y usable travel (mm)	400	1,200
Y overall axis length (mm)	950	1,750
Reference Z usable travel (mm)	400	1,500
Z overall axis length (mm)	1,050	2,150

HELICAL RACK | MAXIMUM LOAD SCENARIO

AXES	X	Y	Z
Servos (W)	750	750	1,000
Speed, up to (m/s)	0.80	1.00	0.50

ALTERNATIVES:
Ball screw X 800–1,500 mm / 0.40 m/s; Y 400–1,000 / 0.34; direct Z 400–1,200 / 0.29.
Timing belt X 800–3,000 / 0.80 and Y 400–1,200 / 1.00 (mm / m/s). Reference Z: direct.

DUAL GANTRY · 1,000 kg PRODUCT PAYLOAD · X TRAVEL UP TO 20 METERS

CR-NX-2P

Dual-gantry Cartesian robot for heavy loads, with helical racks on all axes. The technical sheet details usable travel, overall axis lengths and synchronization of both sides of the X axis.



1,000 kg
payload, up to

20 m
X usable travel, up to

Synchronized
X axis

ONE MOTOR, BOTH SIDES SYNCHRONIZED
A single cross-shaft in the reference configuration. Alternative: two electronically synchronized servos, as specified in the project.

TECHNICAL VIEWS FOR AXIS IDENTIFICATION

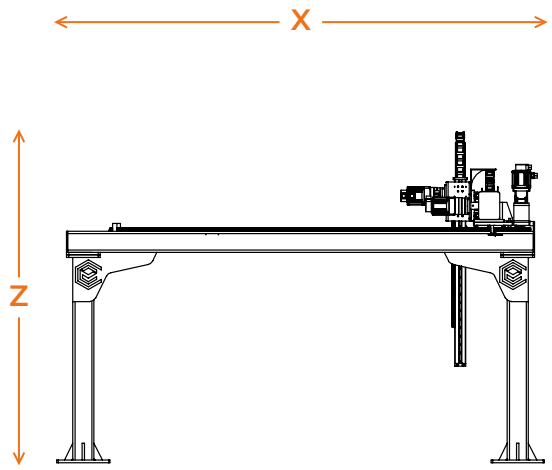

FRONT · X / Z

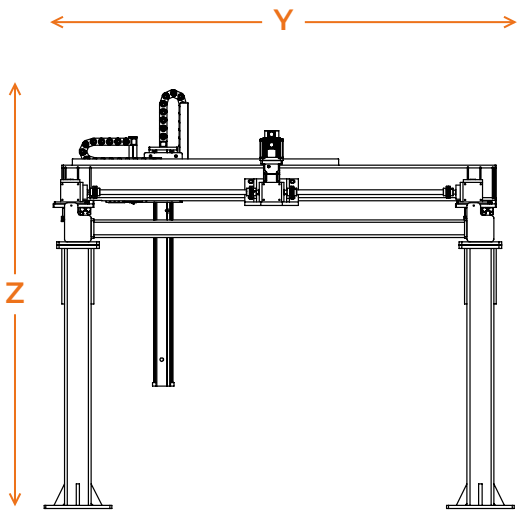

SIDE · Y / Z

Views not to scale. Overall lengths refer to the axes, not the installation envelope.

REFERENCE RANGES AND CONFIGURATION

PARAMETER	MINIMUM	MAXIMUM
Product payload (kg)	-	1,000
Tool and accessories (kg)	-	150
Total interface load (kg)	-	1,150
X usable travel (mm)	1,500	20,000
X overall axis length (mm)	2,240	20,740
Y usable travel (mm)	800	3,000
Y overall axis length (mm)	1,595	3,795
Reference Z usable travel (mm)	500	2,000
Z overall axis length (mm)	810	2,310

HELICAL RACK | MAXIMUM LOAD SCENARIO

AXES	X	Y	Z
Servos (W)	2,000	2,000	2,000
Speed, up to (m/s)	0.60	0.50	0.08

CONFIGURATION:
Helical racks on X/Y/Z. Reference: 2 kW per axis at 2,000 rpm for a 1,000 kg product payload. Other loads require separate sizing. X travel up to 20 m requires supports and alignment as specified in the project.

TECHNOLOGY AND COMPONENTS

The engineering behind every movement

Delta technology and Carioli engineering to automate your process.
Controls, drives and protection selected for each application.



Delta Motion PLC

Motion control
with EtherCAT.



Delta servo system

Drive control and
precise movement.



Delta HMI

Operation controls
and display.



Inductive sensors

Axis referencing
and travel limits.



Grippers and tooling

Mechanical, pneumatic
or vacuum gripping.



Machine safeguarding

Fencing, light curtains
or laser scanners.



Ball screw

Positioning
and rigidity.



Rack and pinion

Motion over
long travel ranges.

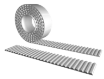

Timing belt

Agile movement.

COMPANIES THAT TRUST US

WHERE TO FIND US

carioliengenharia.com.br

+55 43 99168-1098

/carioliengenharia

@carioli_engenharia

CATALOGS

VIEW OUR CATALOG
VER NUESTRO CATÁLOGO



Talk to our team to find
the right solution for your operation.